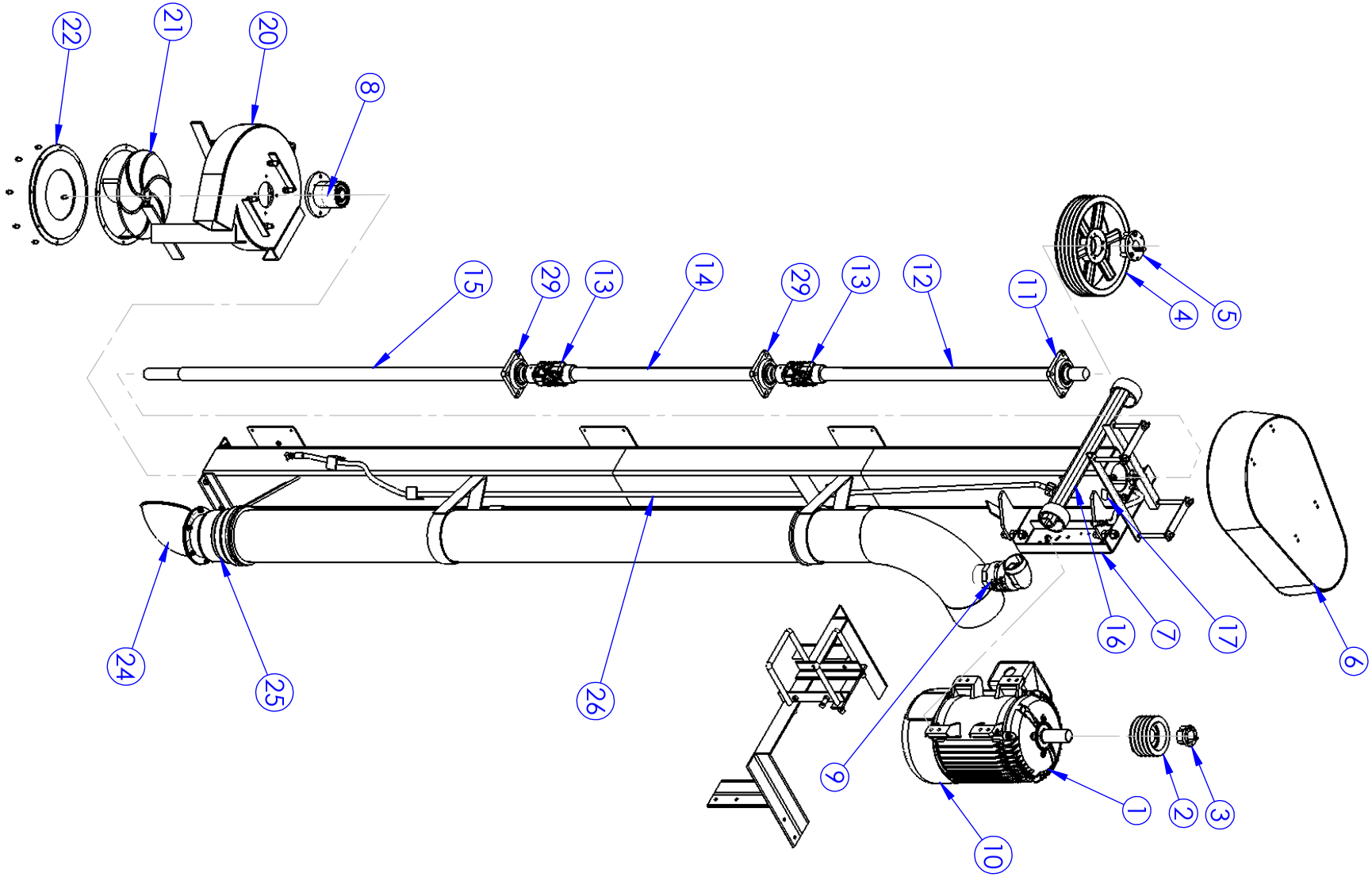

US FARM SYSTEMS	2955 SOUTH K ST. TULARE, CA. 93274 1-800-811-9462	DESC: BEAM WELD-ASSY, PPBD, SECTIONAL			PART: 20-40-224	M2M REV: 000
		ENG: 294-SS	DATE: 8/28/2009	SCALE: 1:24	A	SHEET: 1 OF 2	SW REV: A-03

G:\SolidWorks\SolidWorks To M2M Transition Dir\294-SS\20-40-224 Parts Book.slddrw 8/28/2009

BEAM WELD-ASSY, PPBD, SECTIONAL

General Table

Item	Part #	Rev	Description
1	97-01-427-1	000	MOTOR, ELECTRIC, 30HP, 1800 RPM (See Note)
2	70-44-060	00	PULLEY, 4 BELT, 4 B 6.0 SD (See Note)
3	60-32-207	01	BUSHING, QD HUB, SD 1 7/8" (See Note)
4	70-44-154	00	PULLEY, 4 BELT, 4B154 SF (See Note)
5	60-32-406	01	BUSHING, QD HUB, SF 1 3/4"
6	20-20-095-2	100	GUARD, BELT, 32 1/2", PLASTIC
7	91-20-169	000	MOUNT, MOTOR BASE, B.D UNIVERSAL
8	20-40-073-1	000	HOUSING ASSY, BRG/SEAL, PP-FAP, 5SL (See Note)
9	53-11-001	00	VENT, AIR, 2" (See Note)
10	007	00	DECAL, ROTATION RIGHT 1 1/2X6"
11	98-11-031	01	BEARING, FLANGE, VF4S-328 BROWNING
12	20-20-189	000	SHAFT, 53"
13	20-40-097	00	YOKE WELD, 35 SER 1 3/4" X 1 3/4"
14	20-20-188	000	SHAFT, 44" (See Note)
15	20-20-186	000	SHAFT, 76 1/2" LH THREAD, 5 SEAL (See Note)
16	004	00	DECAL, LUBE 45 SHOTS 100HRS 2X4 1/2
17	0014	000	DECAL, LUBE 4 SHOTS 300HRS 1X2 1/4
18			
19			
20	20-34-004-13	000	HOUSING WELD, 14" X 3" LH, ROT (See Note)
21	20-36-004-1LH	00	IMP WELD LH 14" X 3" 4-B 2" TH (See Note)
22	20-37-004	00	PLATE, INTAKE, 14" X 8" (See Note)
23			
24	20-30-130	000	DISCHARGE WELD, PIT UNITS (See Note)
25	20-40-109-5	00	ADPT. WELD., 9" FLG. X 8" F/C (See Note)
26	20-10-019	00	HOSE, GREASE, 1/4", H10404 (See Note)
27			
28			
29	20-20-098-1	01	BEARING, FLANGE, RCJ 1 3/4

Serial Number Required When Ordering Parts

Note: This Part/Size/Length Varies Per Unit

M2M REV:

SW REV: A-03

PART:

SHEET: 2 OF 2

SCALE: 1:24

A

DATE: 8/28/2009

DESC:

ENG: 294-SS

US FARM SYSTEMS
2955 SOUTH K ST.
TULARE, CA. 93274
1-800-811-9462

G:\SolidWorks\SolidWorks To M2M Transition Dir\294-SS\20-40-224 Parts Book.slddrw 8/28/2009